Terrazzo Lumina Lighting Diagrams

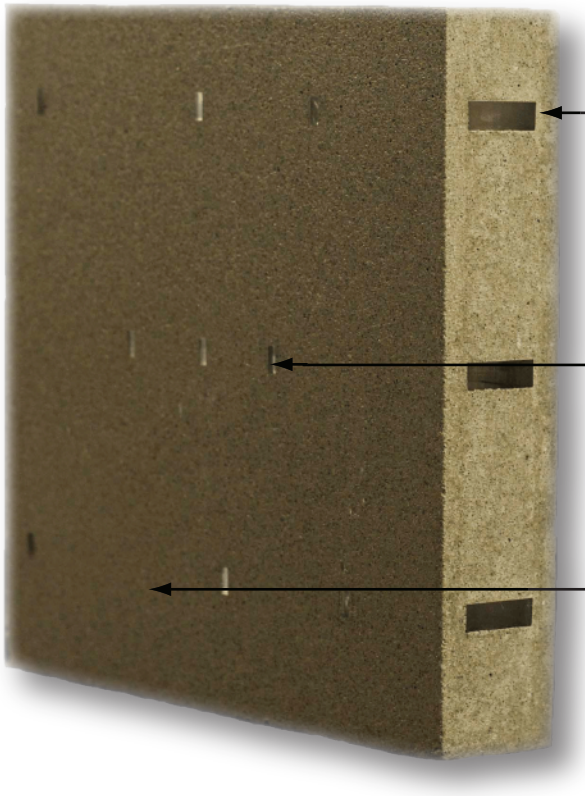

Light Input Terminal
These portions of the slab are designed to recieve light from an LED light strip. The LED must be shining directly into the terminal for maximum Light Point brightness.

Light Point
This is where light shines out of the face of the Terrazzo Lumina Slab. There must be an LED light shining into the Light Input Terminal for the Light Points to illuminate.

Slab Face
All exposed sides of Terrazzo Lumina Slabs are sealed with a waterproof and wear-resistant coating.

info@sensitile.com phone:313.872.6314 fax: 313.872.6315 1735 Holmes Road Ypsilanti, Michigan 48198 USA
© 2010 Sensitile Systems; All rights reserved; Scintilla®, Jali®, Sensitile® are registered trademarks of Sensitile Systems, LLC

Terrazzo Lumina Lighting Diagrams

These diagrams illustrate the multiple ways in which Sensitile Terrazzo Lumina can be illuminated. Sensitile can provide all the LED lighting components needed for a successful Terrazzo Lumina installation. If you choose to use your own LED lighting, please consult Sensitile for proper LED spacing and alignment.

EDGE LIT

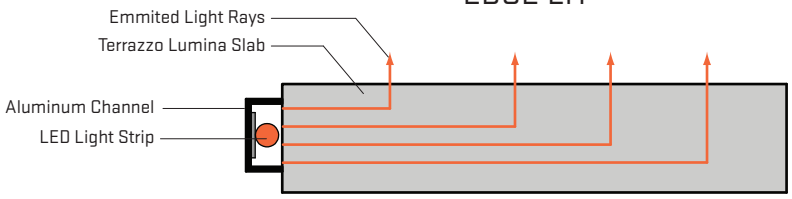

EDGE LIT (BOTH SIDES)

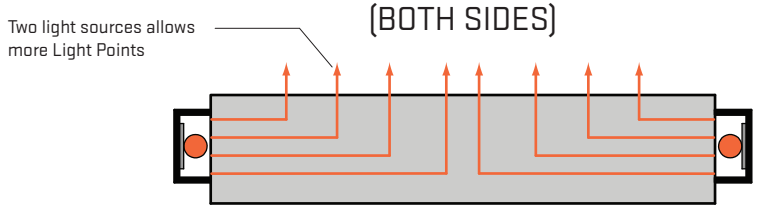

BACK LIT

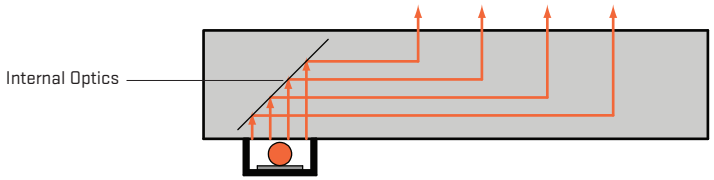

BACK LIT (BOTH ENDS)

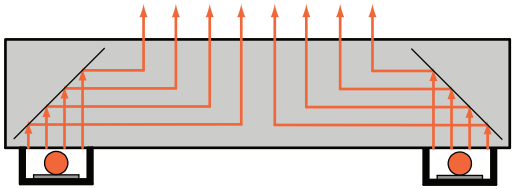

BACK LIT (MIDDLE)

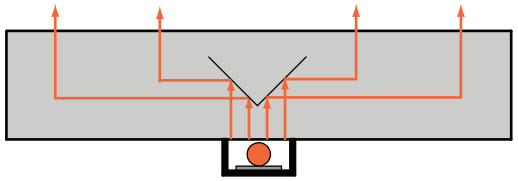

BACK LIT (MULTIPLE)

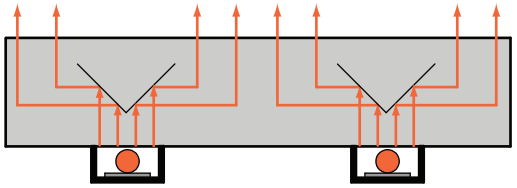

info@sensitile.com phone:313.872.6314 fax: 313.872.6315 1735 Holmes Road Ypsilanti, Michigan 48198 USA
© 2010 Sensitile Systems; All rights reserved; Scintilla®, Jali®, Sensitile® are registered trademarks of Sensitile Systems, LLC

Terrazzo Lumina Tiles

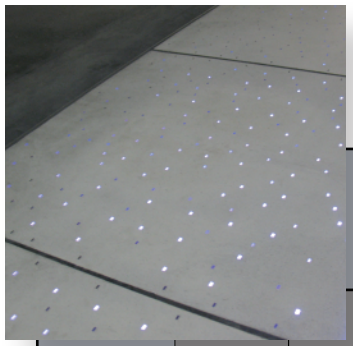

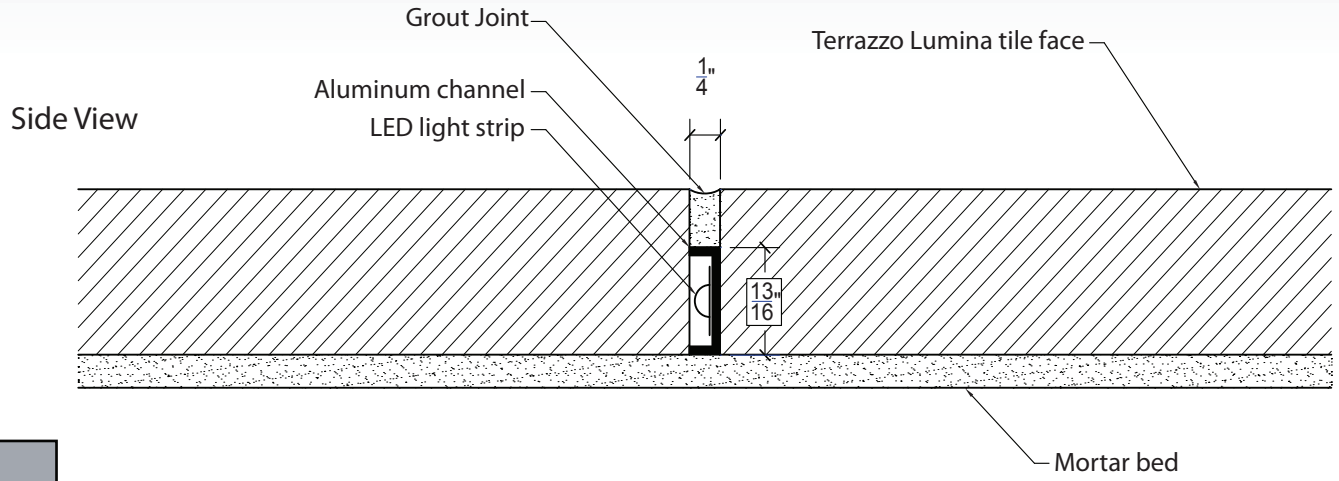

info@sensitile.com phone:313.872.6314 fax: 313.872.6315 1735 Holmes Road Ypsilanti, Michigan 48198 USA
© 2010 Sensitile Systems; All rights reserved; Scintilla®, Jali®, Sensitile® are registered trademarks of Sensitile Systems, LLC

Terrazzo Lumina Countertops

Top View



Underside View

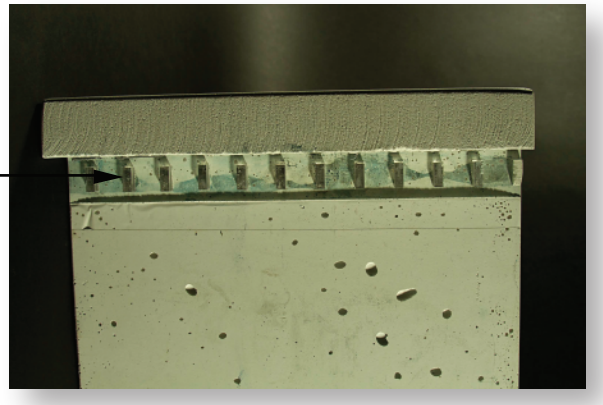

Side View

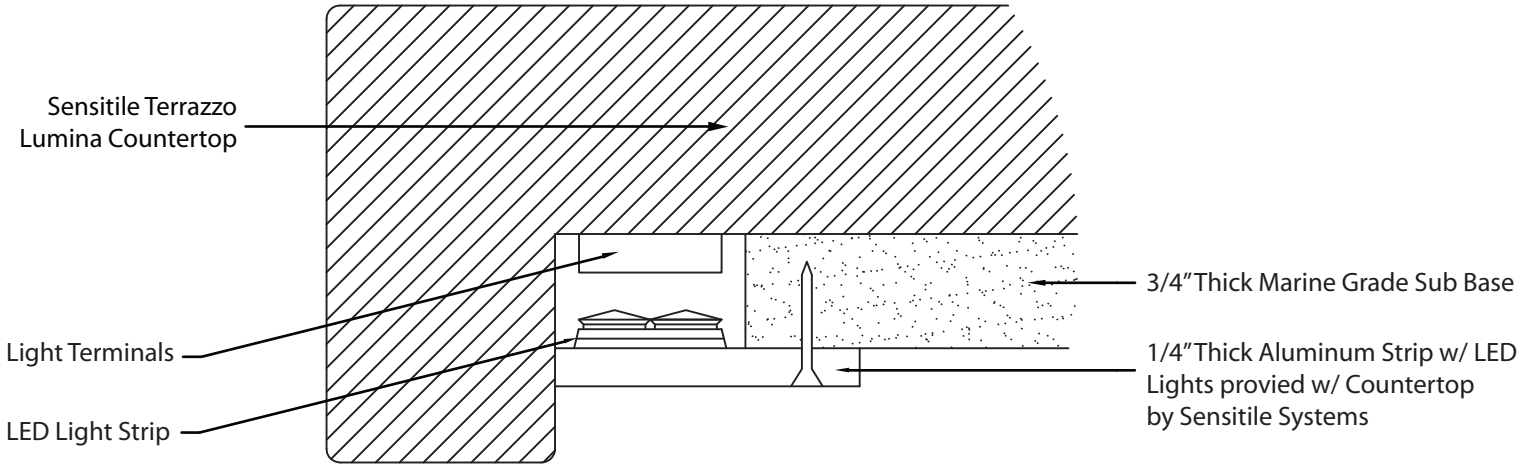

info@sensitile.com phone:313.872.6314 fax: 313.872.6315 1735 Holmes Road Ypsilanti, Michigan 48198 USA
© 2010 Sensitile Systems; All rights reserved; Scintilla®, Jali®, Sensitile® are registered trademarks of Sensitile Systems, LLC

Terrazzo Lumina Flat Slab with Back-Lighting

Side View

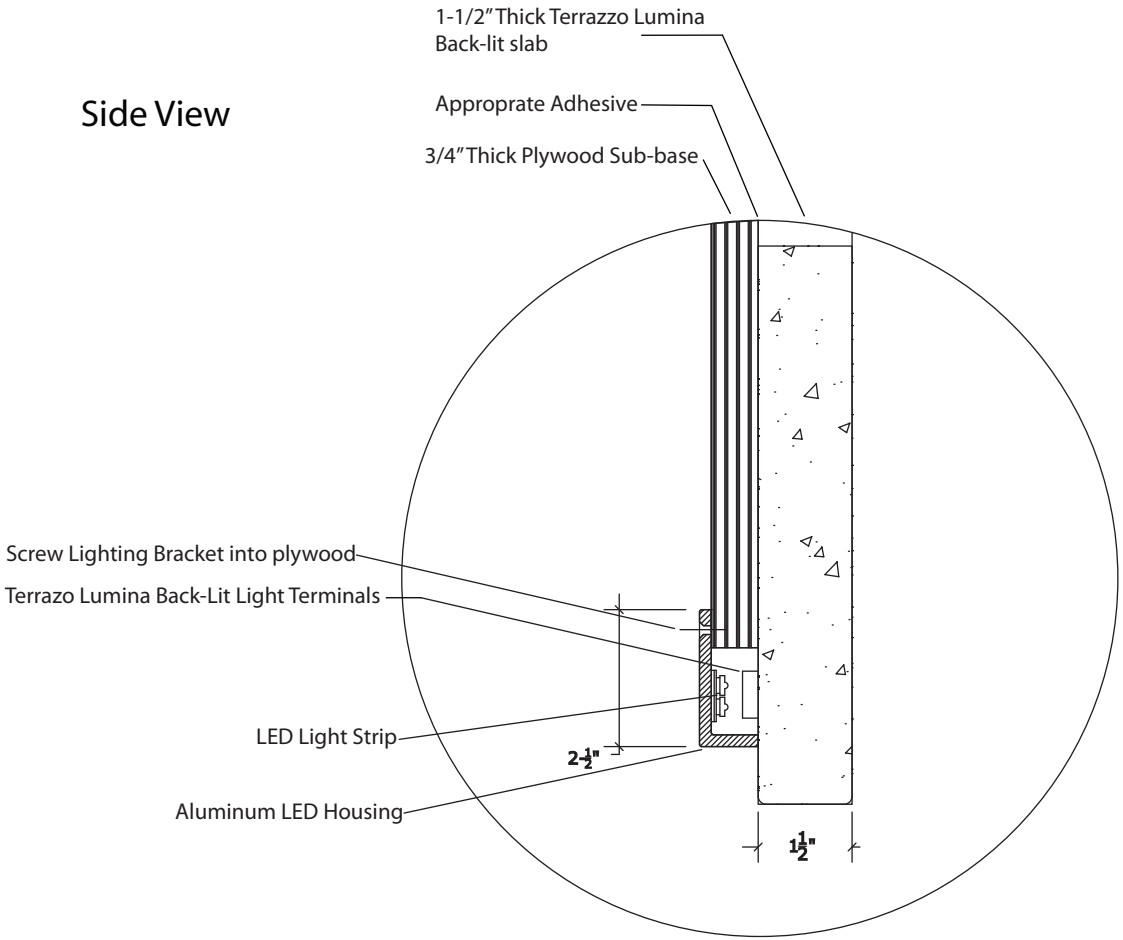

Underside View



info@sensitile.com phone:313.872.6314 fax: 313.872.6315 1735 Holmes Road Ypsilanti, Michigan 48198 USA
© 2010 Sensitile Systems; All rights reserved; Scintilla®, Jali®, Sensitile® are registered trademarks of Sensitile Systems, LLC